# NUT MAKER

Nuts making machine is mainly used for making all kinds of standard and non-standard nuts. It can finish the products in one time with advantages of energy saving, high productivity and easy use.

Professional ☑
Good quality ☑
Energy conservation ☑

**20 YEARS**

20 years of professional export

## Overview

### Quick Details

| | | | |
|---|---|---|---|
| Condition: | New | Place of Origin: | Jiangsu, China |
| Usage: | Heat Treatment Furnace | Type: | Resistance Furnace |
| Brand Name: | Rainbow | Voltage: | 380V,415V |
| Dimension(L*W*H): | 50m | Certification: | CE Certificate |
| Weight (T): | 65 T | Power (kW): | 190 |
| After Warranty Ser... | Video technical support, Online support | Key Selling Points: | Competitive Price |
| Local Service Loc... | India | Applicable Industr... | Manufacturing Plant |
| Showroom Locati... | India | Weight: | 63900kgs |
| After-sales Servic... | Engineers available to service machinery overseas | furnace: | mesh belt furnace |
| Warranty: | 1year | | |

### Supply Ability

| | |
|---|---|
| Supply Ability: | 20 Unit/Units per Year |

### Packaging & Delivery

| | |
|---|---|
| Packaging Details | In Containers,40 feet container, 20 feet container. |
| Port | Shanghai |

# PRODUCTION AREA

Provide You With A Variety Of Products Meet
The Different Needs Of Customers

Extra thick nut, flanged nut, motorcycle link pin, oil plug screw, hex socket lockup nut, squire nut, weld nut, cap nut, blind nut, chain roller, expansion anchor, bicycle and motorcycle shaped spare parts, and so on.

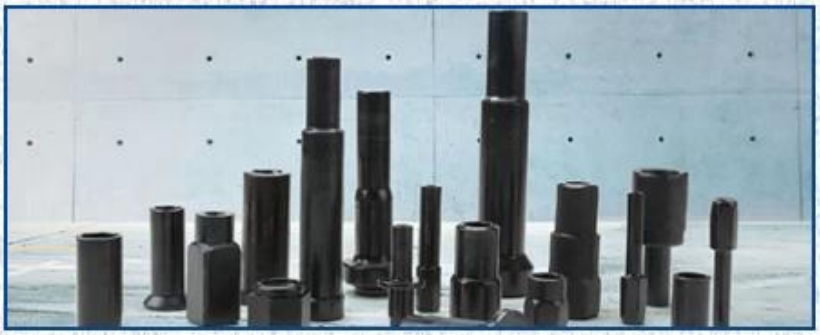

Safety-oriented production

Zero Quality Inspection

Pre-sale Design Customization

# DETAILS SHOW

High quality internal mix to improve your productivity

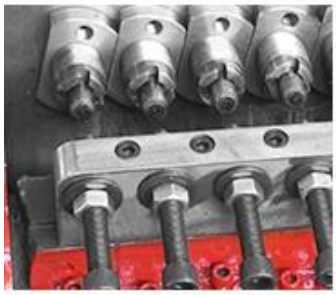

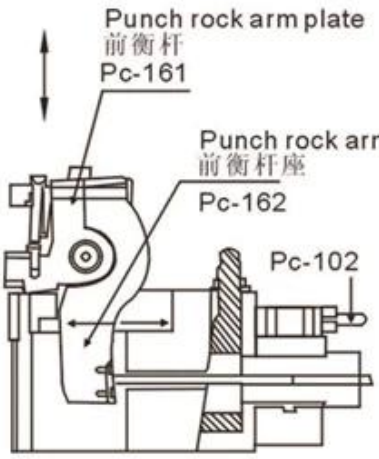


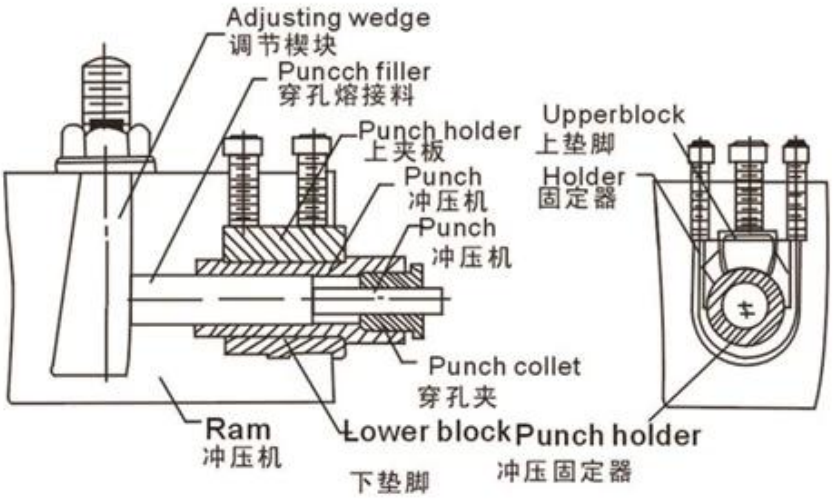


# FIELD OF PRODUCTION APPLICATION

Thanks to the advantage of the cold upsetting equipment itself and the superiority of cold upsetting technique, the formers also are widely used in different national economic territories for producing fasteners and abnormal non-standard parts such as aviation steamer, machinery , rail traffic, vehicle, motorcycle, bicycle, architecture, electric appliance electronic andcommunication products, etc.

30%

## OUR COMMITMENT

We support Trade Assurance on Alibaba to protect your online orders when payment is made through Alibaba.com. If there is any problems with the order, the ALIBABA will reback 30% payment for you in advance. It can ensure on-time shipment and pre-shipment product quality.

# PRODUCT DISPLAY

## Specification

| MODEL | FORGING STATION | MAX. FORGING DIA.(mm) | CUT-OFF DIA. (mm) | PRODUCT SIZE | FORGING LENGTH (mm) | DIE PITCH (mm) | SLIDER STROKE ( mm ) | OUTPUT (per.min.) | MAIN MOTOR (HP) | WEIGHT (T) | DIMENSION (cm) |
|---|---|---|---|---|---|---|---|---|---|---|---|
| JXR08B-6S-12 | 6 | 8 | 8 | M4-M5 | 12 | 38 | 40 | 175/350 | 10 | 3.5 | 195×135×130 |
| JXR11B-6S-14 | 6 | 11 | 10 | M5-M6 | 14 | 50 | 60 | 120/240 | 15 | 4.3 | 230×155×135 |
| JXR11B-6SL-20 | 6 | 11 | 10 | M5-M6 | 20 | 50 | 65 | 110/200 | 20 | 4.5 | 230×155×135 |
| JXR11B-6SL-35 | 6 | 11 | 10 | M5-M6 | 35 | 50 | 125 | 110 | 20 | 4.5 | 230×155×135 |
| JXR11B-7SL-35 | 7 | 11 | 10 | M5-M6 | 35 | 50 | 125 | 110 | 20 | 4.8 | 230×155×135 |
| JXR14B-6S-18 | 6 | 15 | 14 | M6-M8 | 18 | 60 | 70 | 75/160 | 20 | 8 | 300×195×175 |
| JXR14B-6SL-30 | 6 | 15 | 14 | M6-M8 | 30 | 60 | 100 | 85/160 | 30 | 8 | 300×198×175 |
| JXR14B-6SL-50 | 6 | 15 | 14 | M6-M8 | 50 | 60 | 160 | 85 | 30 | 8.5 | 300×198×175 |
| JXR14B-7SL-50 | 7 | 15 | 14 | M6-M8 | 50 | 60 | 160 | 85 | 30 | 9 | 350×198×175 |
| JXR14B-7SL-70 | 7 | 15 | 14 | M6-M8 | 65 | 60 | 220 | 70 | 40 | 9 | 350×220×185 |
| JXR17B-6S-20 | 6 | 17 | 17 | M8-M10 | 20 | 70 | 80 | 65/130 | 20 | 10 | 350×220×185 |
| JXR17B-6SL-50 | 6 | 17 | 17 | M8-M10 | 50 | 70 | 160 | 80 | 40 | 10.5 | 360×220×185 |
| JXR17B-6SL-70 | 6 | 17 | 17 | M8-M10 | 70 | 70 | 220 | 80 | 50 | 10.5 | 360×220×185 |
| JXR19B-6S-25 | 6 | 20 | 19 | M10-M12 | 25 | 80 | 95 | 95 | 40 | 10.5 | 360×220×185 |
| JXR19B-6SL-50 | 6 | 20 | 19 | M10-M12 | 50 | 80 | 160 | 75 | 50 | 16 | 380×245×196 |
| JXR19B-6SL-70 | 6 | 20 | 19 | M10-M12 | 70 | 80 | 220 | 65 | 60 | 16 | 380×235×196 |
| JXR19B-7S-35 | 7 | 20 | 19 | M10-M12 | 35 | 80 | 160 | 75 | 60 | 21 | 380×235×196 |
| JXR19B-7SL-70 | 7 | 20 | 19 | M10-M12 | 70 | 80 | 220 | 65 | 60 | 21 | 450×245×196 |
| JXR22B-6S-30 | 6 | 22 | 22 | M12-M14 | 30 | 80 | 160 | 80 | 60 | 18 | 380×235×196 |
| JXR22B-6SL-60 | 6 | 22 | 22 | M12-M14 | 60 | 80 | 220 | 75 | 60 | 18 | 380×235×196 |
| JXR24B-6S-35 | 6 | 24 | 24 | M14-M16 | 35 | 100 | 160 | 75 | 75 | 27.5 | 550×248×270 |
| JXR24B-6SL-70 | 6 | 24 | 24 | M14-M16 | 70 | 100 | 210 | 65 | 75 | 27.5 | 550×248×270 |
| JXR27B-6S-40 | 6 | 27 | 29 | M16-M18 | 35 | 100 | 160 | 75 | 100 | 30 | 550×248×270 |
| JXR27B-6S-70 | 6 | 27 | 29 | M16-M18 | 70 | 100 | 210 | 65 | 150 | 30 | 550×248×270 |
| JXR33B-6SL-40 | 6 | 33 | 30 | M18-M20 | 35 | 140 | 160 | 70 | 150 | 45 | 650×300×280 |
| JXR33B-6SL-80 | 6 | 33 | 30 | M18-M20 | 80 | 140 | 280 | 60 | 200 | 50 | 650×300×280 |

All specifications are subject to changes without prior notice

# COMPANY PROFILE

Harbin Rainbow Technology Co.,Ltd comes from China National Machinery Import and Export Corp. Harbin branch. The main business is manufacturing cold forging machine, Bolt Maker, Nut Maker, Part Former, Screw Heading Machine, Thread Rolling Machine, Wire Drawing Machine and Mesh Belt Furnace,Zinc plating plant. etc.

We abide by the principles of honesty, credibility, and mutual-benefit, and do our best to serve clients and customers both at home and abroad. With our top-notch professional knowledge and trading experience, we have seen our market development ability and actual business growth with an increasingly faster pace. We sincerely look forward to working with you to facility your company's foreign market development and China market expansion. Let's build a great future together!

## WORKSHOP

SHIPPMENT

# FAQ

BASIC QUESTIONS

**Q:** Are you factory or trading company?

**A:** We are the biggest dealer of machines related to fastener area, and we are the agent of China biggest bolt former manufacturer, heat-treatment furnace, and so on.

**Q:** Why should we choose you?

**A:** We choose the best supplier out of hundreds of similar factories, which assures that our product is of the best quality.

**B:** We have more than 20 years experience in this area.

**C:** We can provide all machines to equip an entire bolt/nut production line.

**D:** Fully support in buyer workmen training.

**E:** Fully support in after-sales service.

**Q:** What about your price?

**A:** The price based on your details request, like your product size, machine model, order quantity, and so on.

**Q:** How about shipping?

**A:** Ocean shipping, air transportation.

**Q:** Do you offer after-sale service?

**A:** Yes, we offer full and good service for all our clients. We will always be there for you, if you have any questions.

For more information of our company ,
please visit our web site: www.rainbowtechnology.net