NUT MAKER

Nuts making machine is mainly used for making all kinds of standard and non-standard nuts. It can finish the products in one time with advantages of energy saving, high productivity and easy use.

Professional ☑
Good quality ☑
Energy conservation ☑

20 YEARS

20 years of professional export

Overview

Quick Details

Condition:	New	Place of Origin:	Jiangsu, China
Usage:	Heat Treatment Furnace	Type:	Resistance Furnace
Brand Name:	Rainbow	Voltage:	380V,415V
Dimension(L*W*H):	50m	Certification:	CE Certificate
Weight (T):	65 T	Power (kW):	190
After Warranty Ser...	Video technical support, Online support	Key Selling Points:	Competitive Price
Local Service Loc...	India	Applicable Industr...	Manufacturing Plant
Showroom Locati...	India	Weight:	63900kgs
After-sales Servic...	Engineers available to service machinery overseas	furnace:	mesh belt furnace
Warranty:	1year		

Supply Ability

Supply Ability:	20 Unit/Units per Year

Packaging & Delivery

Packaging Details	In Containers,40 feet container, 20 feet container.
Port	Shanghai

PRODUCTION AREA

Provide You With A Variety Of Products Meet
The Different Needs Of Customers

Extra thick nut, flanged nut, motorcycle link pin, oil plug screw, hex socket lockup nut, squire nut, weld nut, cap nut, blind nut, chain roller, expansion anchor, bicycle and motorcycle shaped spare parts, and so on.

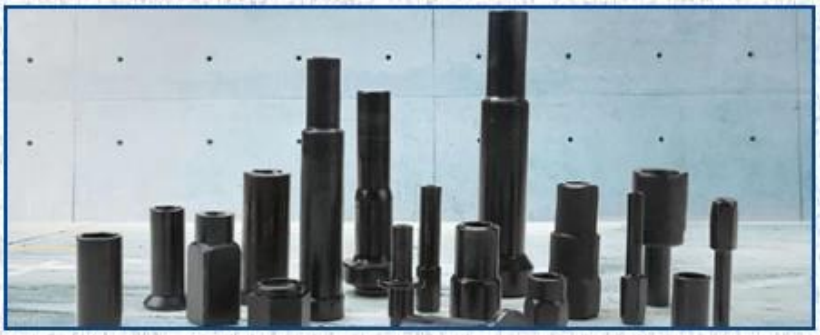

Safety-oriented production

Zero Quality Inspection

Pre-sale Design Customization

DETAILS SHOW

High quality internal mix to improve your productivity

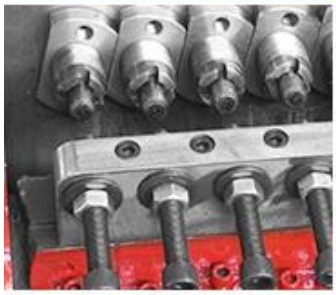

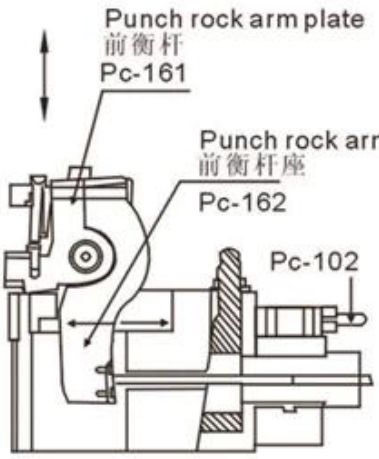

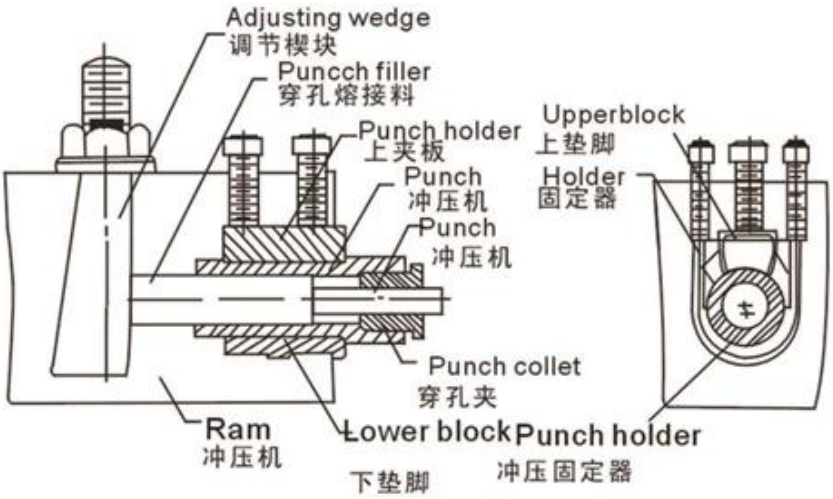

FIELD OF PRODUCTION APPLICATION

Thanks to the advantage of the cold upsetting equipment itself and the superiority of cold upsetting technique, the formers also are widely used in different national economic territories for producing fasteners and abnormal non-standard parts such as aviation steamer, machinery , rail traffic, vehicle, motorcycle, bicycle, architecture, electric appliance electronic andcommunication products, etc.

30%

OUR COMMITMENT

We support Trade Assurance on Alibaba to protect your online orders when payment is made through Alibaba.com. If there is any problems with the order, the ALIBABA will reback 30% payment for you in advance. It can ensure on-time shipment and pre-shipment product quality.

PRODUCT DISPLAY

Specification

MODEL	FORGING STATION	MAX. FORGING DIA.(mm)	CUT-OFF DIA. (mm)	PRODUCT SIZE	FORGING LENGTH (mm)	DIE PITCH (mm)	SLIDER STROKE (mm)	OUTPUT (per.min.)	MAIN MOTOR (HP)	WEIGHT (T)	DIMENSION (cm)
JXR08B-6S-12	6	8	8	M4-M5	12	38	40	175/350	10	3.5	195×135×130
JXR11B-6S-14	6	11	10	M5-M6	14	50	60	120/240	15	4.3	230×155×135
JXR11B-6SL-20	6	11	10	M5-M6	20	50	65	110/200	20	4.5	230×155×135
JXR11B-6SL-35	6	11	10	M5-M6	35	50	125	110	20	4.5	230×155×135
JXR11B-7SL-35	7	11	10	M5-M6	35	50	125	110	20	4.8	230×155×135
JXR14B-6S-18	6	15	14	M6-M8	18	60	70	75/160	20	8	300×195×175
JXR14B-6SL-30	6	15	14	M6-M8	30	60	100	85/160	30	8	300×198×175
JXR14B-6SL-50	6	15	14	M6-M8	50	60	160	85	30	8.5	300×198×175
JXR14B-7SL-50	7	15	14	M6-M8	50	60	160	85	30	9	350×198×175
JXR14B-7SL-70	7	15	14	M6-M8	65	60	220	70	40	9	350×220×185
JXR17B-6S-20	6	17	17	M8-M10	20	70	80	65/130	20	10	350×220×185
JXR17B-6SL-50	6	17	17	M8-M10	50	70	160	80	40	10.5	360×220×185
JXR17B-6SL-70	6	17	17	M8-M10	70	70	220	80	50	10.5	360×220×185
JXR19B-6S-25	6	20	19	M10-M12	25	80	95	95	40	10.5	360×220×185
JXR19B-6SL-50	6	20	19	M10-M12	50	80	160	75	50	16	380×245×196
JXR19B-6SL-70	6	20	19	M10-M12	70	80	220	65	60	16	380×235×196
JXR19B-7S-35	7	20	19	M10-M12	35	80	160	75	60	21	380×235×196
JXR19B-7SL-70	7	20	19	M10-M12	70	80	220	65	60	21	450×245×196
JXR22B-6S-30	6	22	22	M12-M14	30	80	160	80	60	18	380×235×196
JXR22B-6SL-60	6	22	22	M12-M14	60	80	220	75	60	18	380×235×196
JXR24B-6S-35	6	24	24	M14-M16	35	100	160	75	75	27.5	550×248×270
JXR24B-6SL-70	6	24	24	M14-M16	70	100	210	65	75	27.5	550×248×270
JXR27B-6S-40	6	27	29	M16-M18	35	100	160	75	100	30	550×248×270
JXR27B-6S-70	6	27	29	M16-M18	70	100	210	65	150	30	550×248×270
JXR33B-6SL-40	6	33	30	M18-M20	35	140	160	70	150	45	650×300×280
JXR33B-6SL-80	6	33	30	M18-M20	80	140	280	60	200	50	650×300×280

All specifications are subject to changes without prior notice

COMPANY PROFILE

Harbin Rainbow Technology Co.,Ltd comes from China National Machinery Import and Export Corp. Harbin branch. The main business is manufacturing cold forging machine, Bolt Maker, Nut Maker, Part Former, Screw Heading Machine, Thread Rolling Machine, Wire Drawing Machine and Mesh Belt Furnace,Zinc plating plant. etc.

We abide by the principles of honesty, credibility, and mutual-benefit, and do our best to serve clients and customers both at home and abroad. With our top-notch professional knowledge and trading experience, we have seen our market development ability and actual business growth with an increasingly faster pace. We sincerely look forward to working with you to facility your company's foreign market development and China market expansion. Let's build a great future together!

WORKSHOP

SHIPPMENT

FAQ

BASIC QUESTIONS

Q: Are you factory or trading company?

A: We are the biggest dealer of machines related to fastener area, and we are the agent of China biggest bolt former manufacturer, heat-treatment furnace, and so on.

Q: Why should we choose you?

A: We choose the best supplier out of hundreds of similar factories, which assures that our product is of the best quality.

B: We have more than 20 years experience in this area.

C: We can provide all machines to equip an entire bolt/nut production line.

D: Fully support in buyer workmen training.

E: Fully support in after-sales service.

Q: What about your price?

A: The price based on your details request, like your product size, machine model, order quantity, and so on.

Q: How about shipping?

A: Ocean shipping, air transportation.

Q: Do you offer after-sale service?

A: Yes, we offer full and good service for all our clients. We will always be there for you, if you have any questions.

For more information of our company ,
please visit our web site: www.rainbowtechnology.net